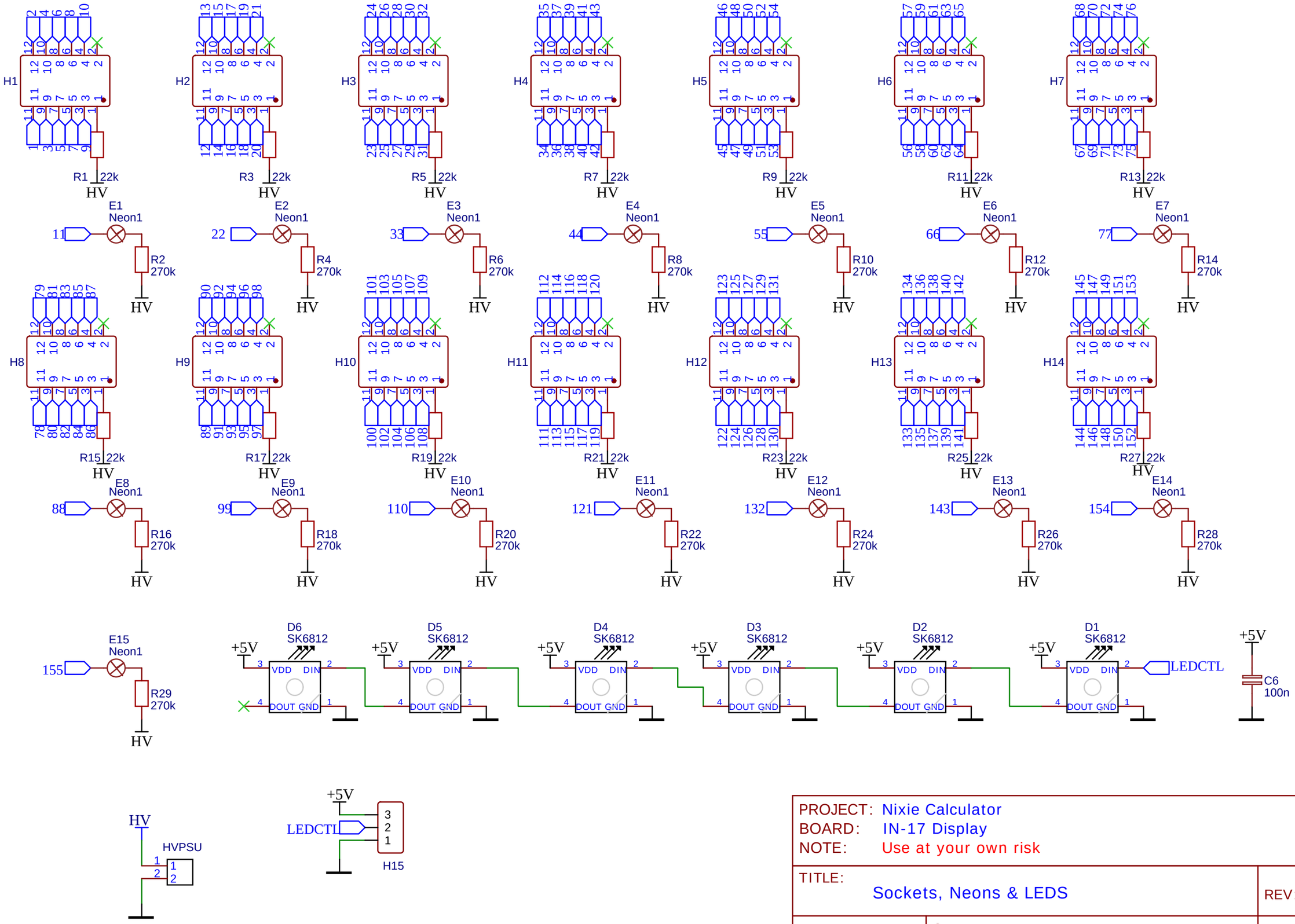

PROJECT: Nixie Calculator
BOARD: IN-17 Display
NOTE: Use at your own risk

TITLE: Sockets, Neons & LEDS

REV: 1a

Company:

Sheet: 1/2

Date: 2021-06-05 Drawn By:

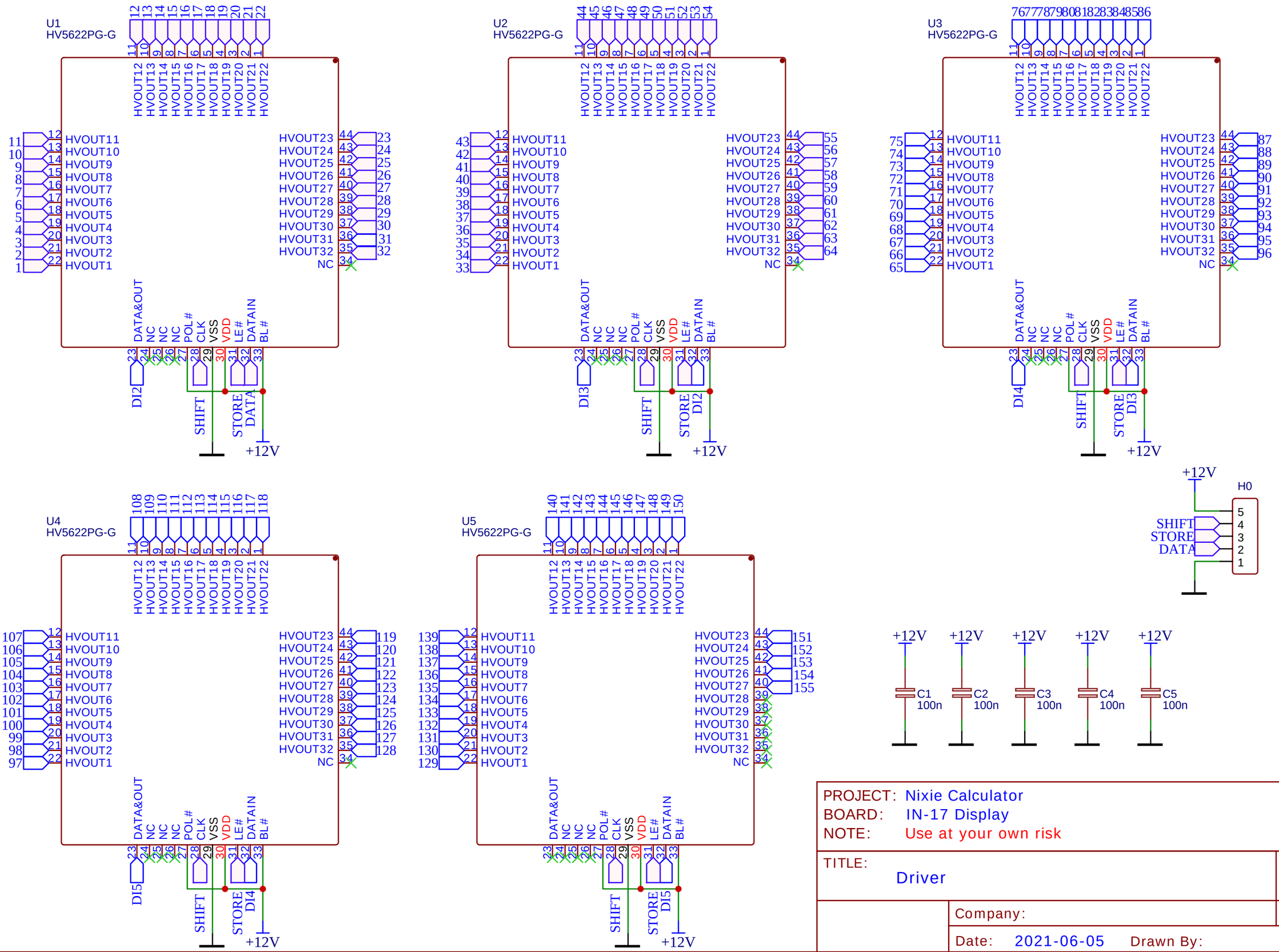

PROJECT: Nixie Calculator
BOARD: IN-17 Display
NOTE: Use at your own risk

TITLE: Driver

REV: 1a

Company:

Sheet: 2/2

Date: 2021-06-05 Drawn By: